CERAMIC BREEDER BLANKET FOR ARIES-CS

A.R. Raffray[1], S. Malang[2], L. El-Guebaly[3], X. Wang[4], and the ARIES Team

[1]*Mechanical and Aerospace Engineering Department and Center for Energy Research, 460 EBU-II, University of California-San Diego, 9500 Gilman Drive, La Jolla, CA 92093-0438, USA, raffray@fusion.ucsd.edu*
[2]*Fusion Nuclear Technology Consulting, Fliederweg 3, 76351 Linkenheim, Germany*
[3]*University of Wisconsin, Fusion Technology Institute, Madison, WI 53706, USA*
[4]*Center for Energy Research, 460 EBU-II, University of California-San Diego, 9500 Gilman Drive, La Jolla, CA 92093-0438, USA*

ABSTRACT

This paper describes the conceptual design of a ceramic breeder blanket considered as one of the candidate blankets in the first phase of the ARIES-CS study. The blanket is coupled to a Brayton power cycle to avoid the safety concern associated with the possibility of Be/steam reaction in case of accident.

I. INTRODUCTION

The first phase of the ARIES-CS study has focused on scoping out maintenance schemes and blanket designs best suited for a compact stellarator (CS) configuration[1,2]. The study will then down-select to a couple of most attractive combinations of blanket configuration and maintenance scheme for more detailed studies culminating in the choice of a point design for a full system design study. One of the blankets developed during the early scoping phase is a helium-cooled ceramic breeder (CB) blanket. Consistent with the guidelines of the study, this concept was developed to an extent sufficient for a credible case to be made regarding performance, fabrication and maintenance.

Ceramic breeder designs tend to favor a modular configuration that, in the case of a compact stellarator, provides the flexibility of setting module sizes best suited to the particular reactor geometry. A ceramic breeder design has traditionally been coupled to a Rankine steam cycle (e.g. the EU He-cooled pebble bed blanket[3]). However, safety concerns have been raised about the possibility of a tube rupture in the module followed by a tube rupture in the steam generator, which could eventually result in unacceptable steam/Be interaction in the case of failure of the pressurized module. Thus, unless a clear case could be made that such an accident is beyond design basis, the module would need to be designed to accommodate the pressurization, which translates into more structure and less tritium breeding. To avoid this issue, it was decided to reconsider the possibility of coupling a Brayton cycle to such a blanket, by optimizing the cycle as well as by maximizing the coolant temperature through limited utilization of oxide-dispersion strengthened (ODS) ferritic steel in high temperature regions. The blanket module is then designed to accommodate a relatively low pressure of ~1 MPa compared to a blanket He coolant pressure of ~8 MPa.

This paper describes the conceptual design of this ceramic breeder blanket. Key parameters are summarized and major issues are discussed.

II. BLANKET CONFIGURATION

The blanket configuration consists of a modular box design that is attractive for a CS application since the module sizes can be adjusted to accommodate maintenance and geometry requirements. The design seems best suited for a port maintenance scheme with the vacuum vessel inside the coil system, as illustrated in Fig. 1 and discussed in more detail in Ref. [4].

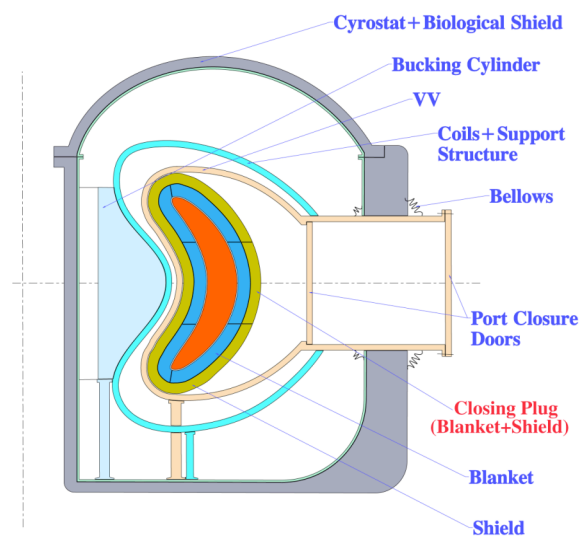

Fig. 1 Cross-section of example ARIES-CS configuration illustrating the location of different components for a port-based maintenance scheme.

Figure 2 shows a schematic of a blanket module. In the absence of a steam cycle, the blanket does not need to be designed to take the steam pressure or even the He

coolant pressure in the case of an accident as module failure would not cause a major safety concern. A design pressure of 1 MPa is assumed. A typical blanket module would have dimensions of up to 1.0 m x 0.65 m x 4.0 m (toroidal x radial x poloidal) with a stiffening plate arranged only in one direction (perpendicular to the FW).

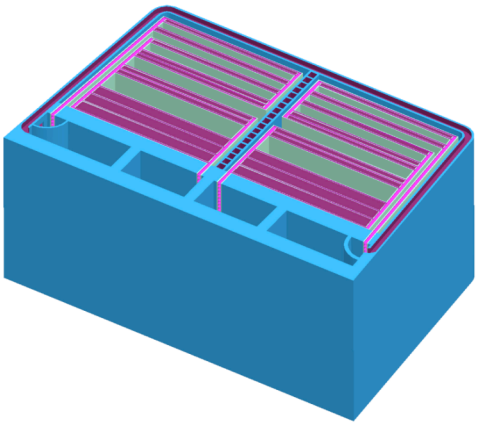

Fig. 2 Ceramic breeder blanket module.

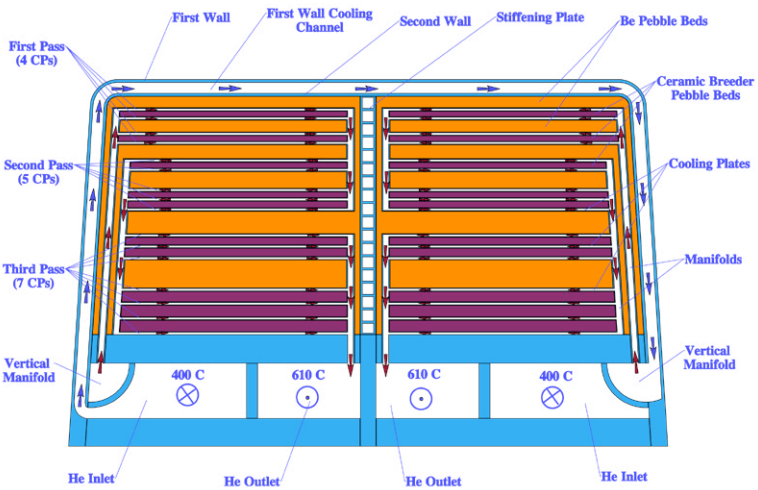

Fig. 3 Radial/toroidal cross-section view of ceramic breeder blanket module.

The module layout consists of a number of CB and Be multiplier packed-bed layers separated by cooling plates and arranged in parallel to the first wall, as illustrated in the cross-section view shown in Figure 3. Packing fractions of ~62% are assumed in both cases. Lithium ortho-silicate (Li_4SiO_4) is selected as CB, with lithium titanate (Li_2TiO_3) as a possible alternative. The He coolant is first routed toroidally through the first wall cooling plate in alternating directions and then through a series of 3 toroidal passes in the blanket regions, each pass consisting of parallel-flow routing through several cooling plates. The first wall cooling plate consists of an assembly of 2 cm x 2 cm channels between two 4-mm thick plates. If required, a thin (~1 mm) tungsten armor layer can be included on the plasma side. The blanket cooling plates consist of 4 mm x 4 mm channels between two 1-mm thick plates. The blanket region radial manifolds consist of a number of 15 mm x 15 mm channels. The blanket box and inlet manifold are build of reduced activation ferritic steel with a maximum allowable temperature, $T_{max,FS}$ = 550°C[5]. The first wall can be plated with a layer of ODS ferritic steel with a maximum allowable temperature, $T_{max,ODS\text{-}FS}$ ~700°C[5].

III. DESIGN ANALYSIS

III.A. Neutronics

The initial number and thicknesses of the Be and CB regions (arranged in parallel to the first wall) were optimized for an overall tritium breeding ratio of 1.1. The blanket must also provide enough shielding to make the shield a lifetime component, and, in combination with the shield, to allow for re-welding of the coolant access pipes and to provide adequate protection of the coils. The ^{6}Li enrichment in the CB beds can be increased from the front (20% Li^6) to the back (90% Li^6) for better breeding. The analysis was done based on the following parameters and constraints:

- Wall load = 4.5 MW/m^2;
- First wall surface heat flux, q''_{plasma} = 0.5 MW/m^2;
- He inlet pressure of 8 MPa and temperature of 400°C;
- Effective thermal conductivity for ~0.8 mm average-size Be and CB pebble beds = 8 and 1.2 W/m-K, respectively[3];
- Minimum CB bed thickness = 8 mm;
- Maximum CB temperature based on sintering, $T_{max,CB}$ = 950°C[3];
- Maximum Be temperature based on loss of material strength, $T_{max,Be}$ = 750°C[3].

The initial analysis indicated that the TBR can be met with a total blanket thickness of 65 cm including a 20 cm manifold region at the back and a total of 6 Be regions and 10 CB regions, as illustrated in Figure 4. The corresponding energy multiplication factor is 1.3.

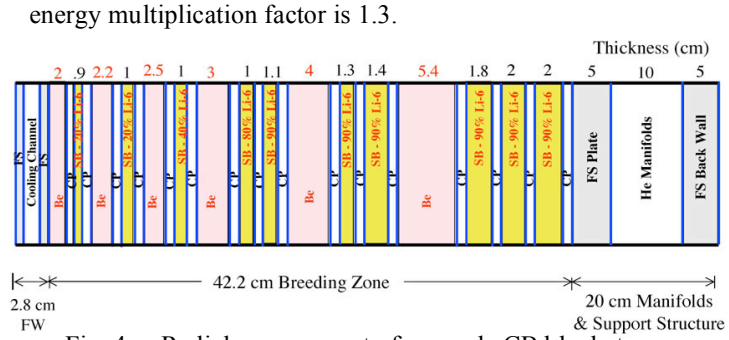

Fig. 4 Radial arrangement of example CB blanket.

III.B. Thermal-Hydraulics and Power Cycle

A parametric thermal-hydraulic analysis of the blanket

coupled to a Brayton cycle was performed. Two Brayton configurations were considered: (I) the cycle illustrated in Figure 5 with 3-stage compression and a single stage expansion[6]; and (II) a more advanced cycle with 4-stage compression and 4-stage expansion + 3 re-heaters, as illustrated in Figure 6 (similar to that of Ref.[7]).

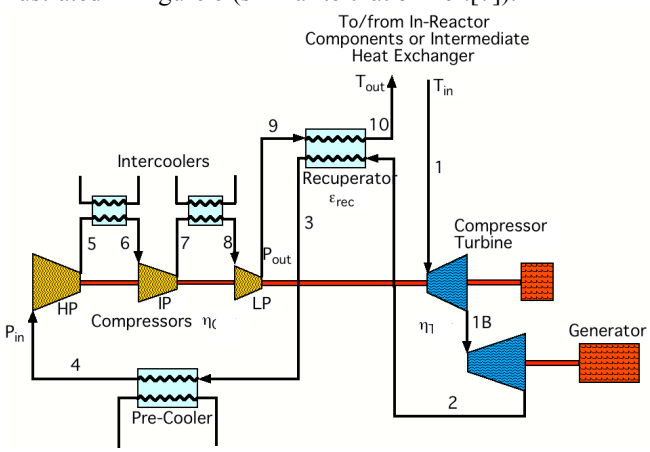

Fig. 5 Schematic of Brayton Cycle I

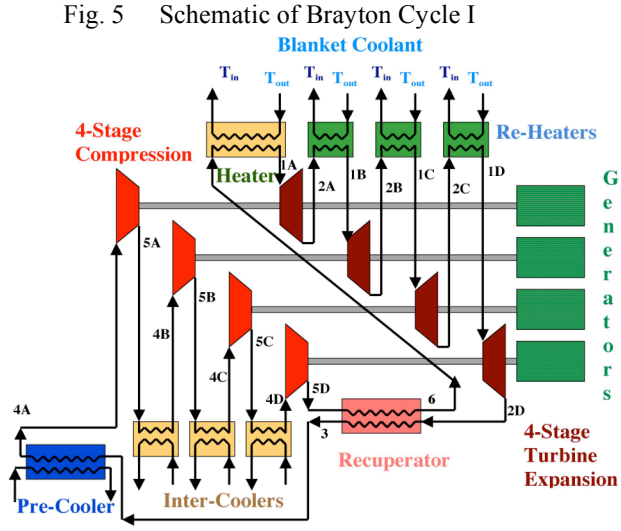

Fig. 6 Schematic of Brayton Cycle II

The analysis assumed parallel cooling of the divertor and blanket by He at 8 MPa; the blanket outlet He is mixed with the divertor outlet He (carrying ~15% of the total thermal power at an assumed temperature, $T_{out,div}$= 750°C) and then flown through the heat exchanger to transfer power to the cycle He with an assumed temperature difference between the hot and cold legs of the heat exchanger, ΔT_{HX}= 30°C. The Brayton cycle parameters assumed for the analysis are as follows: minimum He temperature in cycle (heat sink) = 35°C; turbine efficiency, η_T = 0.93; compressor efficiency, η_C = 0.89; recuperator effectiveness, ε_{rec} = 0.95; and total compression ratio < 2.87.

The number and thicknesses of the Be and CB regions obtained from the initial neutronics analysis were used as starting point for the analysis. The analysis then proceeded by optimizing the cycle efficiency for different wall loads while accommodating the constraints listed in Section III.A as well as maintaining the total blanket thickness, $\Delta_{blkt,radial}$= 0.65 m (assumed as tritium breeding requirement). The volumetric heat generation in the different regions was scaled to the wall load in each case.

Figure 7 shows the cycle efficiency as a function of the wall load for Cycle I for assumed maximum ferritic steel (FS) temperature limits of 550°C ($T_{max,FS}$) and 700°C ($T_{max,ODS-FS}$), respectively. The efficiency peaks to ~36.5% and ~44%, respectively, corresponding in both cases to a wall load of ~3 MW/m^2. The maximum wall load that can be accommodated is 5 MW/m^2 with corresponding efficiencies of ~35% and ~42%, respectively. In general for lower wall loads (<~3 MW/m^2), the overriding constraint is the maximum FS temperature limit in the first wall while for higher wall loads, the CB and Be maximum temperature constraints are more limiting. Results for Cycle II assuming a maximum ODS FS temperature of 700°C are also shown in the figure. The maximum efficiency is increased to about 46.5%, corresponding to a wall load of 3 MW/m^2, which, in this case, is also the maximum wall load that can be accommodated. This results from the narrow difference between the blanket He inlet and outlet temperatures imposed by the heat transfer requirements to the reheat stages, as illustrated in Figure 8.

The small blanket He temperature rise associated with Cycle II results in a high He flow rate for a given thermal power and a correspondingly higher pressure drop (and pumping power) through the blanket and in particular through the first wall channel. Figure 9 shows the ratio of pumping power to thermal power, $P_{pump}/P_{thermal}$, as a function of wall load for the three cases shown in Fig. 7. Whereas for the two Brayton Cycle I cases, this ratio is maintained within ~5%, in the Brayton Cycle II case, this ratio increases sharply as the wall load is increased, from ~15% at a wall load of 0.5 MW/m^2 to ~80% at a wall load of 3 MW/m^2. Clearly, this is unacceptable and illustrates the limitation of such an advanced cycle when applied to the ceramic breeder blanket case.

Additional parametric analyses were done to help understand better the performance of the blanket based on different sets of parameters. For example, reducing the total blanket thickness from 0.65 m to 0.6 m would allow for a gain of a couple of points in cycle efficiency at a given neutron wall load, and would also allow for accommodation of a slightly higher wall load, ~5.5 MW/m^2. However, detailed neutronics analysis of the new geometry would be required to confirm whether the tritium breeding would still be acceptable.

The effect of increasing the surface heat flux was also assessed for the Brayton Cycle I configuration, and example results are summarized in Figure 10. The figure

shows the cycle efficiency as a function of the surface heat flux for an example case with a maximum FS temperature limit of 700°C and a neutron wall load of 2 MW/m^2. The ratio of pumping power to thermal power was less than 5% for all cases with heat fluxes less than 0.8 MW/m^2. The efficiency decreases significantly with increasing plasma surface heat flux. This is directly linked with the decrease in He coolant temperatures (in particular the outlet temperature) required to accommodate the maximum FS temperature limit in the first wall. It seems very challenging to accommodate such a design with a Brayton cycle for plasma heat fluxes much higher than 0.5 MW/m^2.

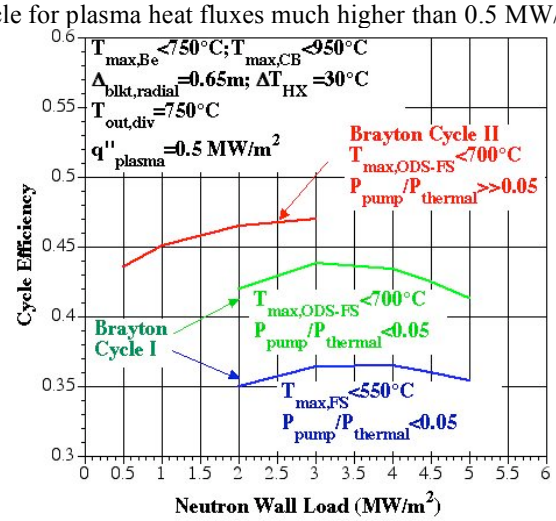

Fig. 7 Cycle efficiency as a function of neutron wall load for ceramic breeder blanket coupled with Brayton Cycles I and II.

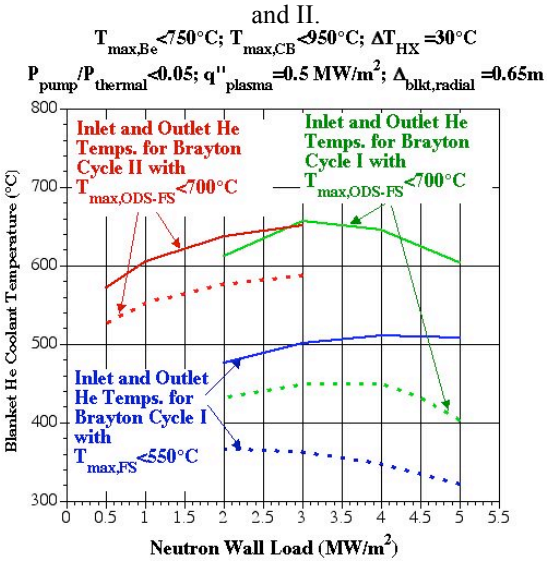

Fig. 8 Blanket He inlet and outlet temperatures corresponding to the cases shown in Fig. 7.

Based on these analyses, the preferred option would be to use the Brayton I cycle and to assume a maximum FS temperature of 700°C which means utilizing ODS FS in regions where the structure operating temperature exceeds 550°C. The major parameters for such a design are summarized in Table I.

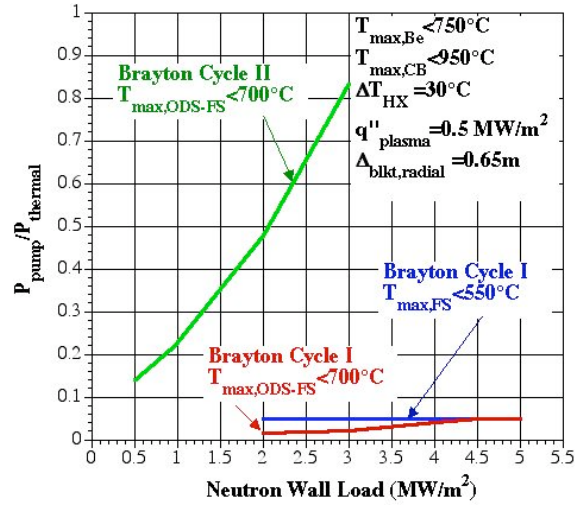

Fig. 9 Ratio of pumping to thermal power as a function of neutron wall load corresponding to the cases shown in Fig. 7.

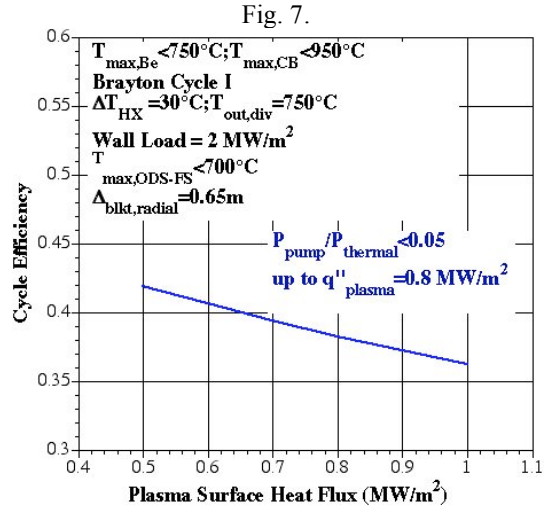

Fig. 10 Brayton Cycle I efficiency as a function of the surface heat flux for an example case with a neutron wall load of 2 MW/m^2.

III.C. Stress Analysis

The blanket is coupled to a Brayton cycle that avoids the potential for Be/steam interaction (associated with a Rankine cycle under accident conditions). The module box can then be designed to a more modest pressure (~1MPa or less) which results in less structure and better breeding. A structural analysis was done using the ANSYS finite element code to estimate the module stress under 1 MPa pressure (e.g. associated with a LOCA and a pressure relief system). The model was based on a blanket segment including the module wall and stiffening plate and the results are summarized in Figure 11. For FS at an average temperature of 615°C, the maximum allowable stress intensity is 115 MPa (based on S_m for F82H)[5]. The

stresses are all under this maximum value except for three localized regions shown in the figure. These local stress peaks can be allievated by adjusting the design at these locations. Also, the maximum allowable stress under accidental conditions is larger than the S_m value assumed for normal operating conditions.

Table I Example Parameters for CB Blanket

Breeder Material	(Li_4SiO_4 or Li_2TiO_3)
Surface Heat Flux	0.5 MW/m^2
Maximum Wall Load	5 MW/m^2
Typical Blanket Dimension (toroidal x radial x poloidal)	1 m x 0.65 m x 4 m
TBR	1.1
Energy Multiplication Factor	1.3
He Pressure	8 MPa
Blanket He Inlet/Outlet Temp.	400/610°C
He Velocity in FW Channel	75 m/s
Maximum FS Temperature	700°C
Brayton Cycle I Efficiency	42%
Pump. Power to Thermal Power	<0.05

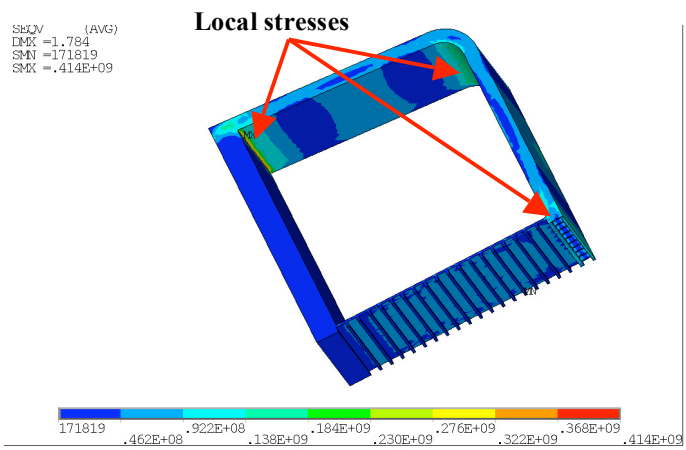

Fig. 11 Primary membrane stress intensity in blanket module under 1 MPa pressure.

IV. DESIGN ASSEMBLY DETAILS

IV.A. Blanket Assembly

Within the blanket, each breeding zone is enclosed between two cooling plates, as illustrated in Figure 3. The breeding zones are filled outside the blanket box with the ceramic pebbles which are contained by a membrane. The cooling plates are welded to the inner radial manifold plate and the whole assembly is inserted in the blanket box. The empty spaces inside the box are then filled with the Be pebbles which are compacted by vibrating the module. A key issue with utilizing ODS FS for the cooling plates is the joint between the cooling plates and the manifold since there are no demonstrated methods yet for producing high strength welds with ODS ferritic steel.

IV.B. Module Back Manifolds

The He coolant enters the blanket module from the back side through the outer region of an annular tube. It is then routed toroidally to the module inlet manifolds from where it is flown to cool the first wall and side walls before flowing through the three passes in the blanket regions. It is then collected in the module outlet manifolds and flown out of the module through the inner region of the annular tube. The blanket He outlet temperature is ~610°C for the assumed case with Brayton Cycle I and a maximum FS allowable temperature of ~700°C. This infers the use of ODS FS in blanket regions where the structure temperature is higher than about 550°C. The module outlet manifold would be such an area. One possible design is to use an isolated floating channel within the manifold which would be made of ODS FS while the structure around can be made of regular FS, as shown in Figure 12. There would still be the need to provide an ODS FS joint between the cooling plate outlet and the manifold; this is a key R&D item in order for this blanket to provide acceptable performance.

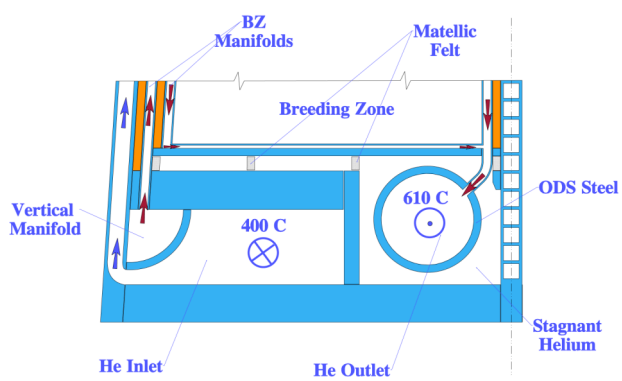

Fig. 12 Example module outlet manifold design for high temperature He operation (using ODS FS).

V. MAINTENANCE

The module design is best suited for a port maintenance scheme, the module installation and replacement being performed from the plasma side with an articulated boom. Detailed of the maintenance scheme is provided as part of Ref. [1]. Here, some key aspects with respect to the module design itself are highlighted. Prior to module removal, the coolant pipes would need to be cut, and then rewelded following module replacement. An initial concept of how to accommodate this assumes the arrangement of one access tube in the center of the module; this facilitates blanket module replacement and enables a symmetric design of the module, with poloidal manifolds on both sides of the module, running from the middle to top and bottom of the module. A shielding plug is used, as shown in Figure 13 (not to scale, its first wall coverage fraction being typically ~3%). When removed, the shielding plug provides a large opening for access to

the concentric coolant pipes located at the rear side of the blanket module.

Utilizing an annular cooling pipe allows for a sliding joint for the inner tube separating the hot exit flow in the central tube from the "cold" inlet flow in the annulus. Therefore, only the outer tube has to be cut/re-welded for module replacement. This weld is located behind the permanent shielding zone, limiting the He-generation in the steel to a value allowing re-weldability up to the end of the plant life (assumed as <~1 appm He). The concentric coolant access tubes are arranged in the middle of the module, allowing free differential expansion of the module in all directions. The outer coolant access tube with typical dimensions of ~400 mm in diameter and 20 mm in wall thickness can also serve as mechanical attachment with a resulting shear stress of about 1 MPa for a 5-tonne module. Additional mechanical attachments are required at both ends of the modules; these could consist of bolts connecting the blanket module to the shield region and accessible through gaps between neighboring modules which would allow for tool insertion from the plasma side. Once the replacement module is attached and the shield plug inserted, another weld would be required between the shield plug and the first wall but in this case both parts will be unirradiated.

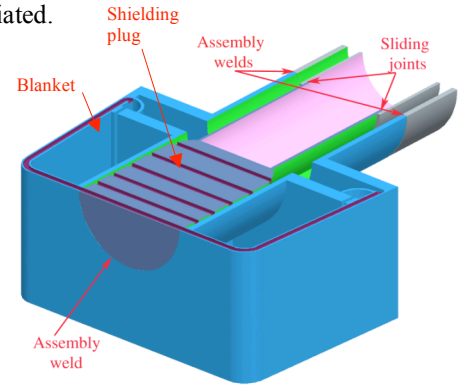

Fig. 13 Blanket module schematic showing shielding plug and access to coolant annular pipe at the back.

VI. CONCLUSIONS

A He-cooled CB concept has been evolved, consisting of a number of single-sized Li_4SiO_4 breeder and Be multiplier packed bed layers separated by cooling plates and arranged in parallel to the first wall. The blanket is coupled to a Brayton power cycle to avoid the potential safety problem associated with steam generator failure in the case of a Rankine cycle. The design pressure for the blanket box is modest, ~1MPa, allowing for a relatively simple design with less structural material and better breeding. Reduced activation FS is used as structural material in regions where the temperature is <550°C and ODS FS in regions where the temperature is higher (but <700°C). A tritium breeding ratio of 1.1 is achievable for a total blanket thickness of 0.65 m. A key issue which must be addressed is the joining of ODS FS.

Scoping studies indicate the possibility of accommodating neutron wall load of up to 5-5.5 MW/m^2 and a surface heat flux of 0.5 MW/m^2 with corresponding cycle efficiencies of up to 42% for a Brayton cycle with 3-stage compression and one-stage expansion. The maximum FS temperature limit in the FW makes it very challenging to accommodate higher surface heat fluxes. The cycle efficiency can be increased to ~47% for a more advanced 4-stage compression, 4-stage expansion cycle. However, the smaller coolant temperature rise in this case requires higher flow rate and the pumping power requirement is unacceptably large, effectively ruling out such a cycle for this application.

Credible fabrication and assembly processes have been evolved for a port-based maintenance scenario. The use of a module front shield plug allows access to the annular cooling pipes at the back for blanket removal and installation. Overall, the design must be assessed in conjunction with the other blanket concepts evolved during Phase I of the ARIES-CS study in order to down-select to a couple of concepts for the more detailed study planned for Phase-II.

ACKNOWLEDGEMENT

This work was supported under U.S. Department of Energy Grant No. DE-FC03-95-ER54299.

REFERENCES

[1] F. NAJMABADI, et al. and the ARIES Team, "Exploration of Compact Stellarator as Power Plants: Initial results from ARIES-CS Study," this issue.

[2] A.R. RAFFRAY, L. EL-GUEBALY, S. MALANG, X. WANG and the ARIES Team, "Attractive Design Approaches for a Compact Stellarator Power Plant," this issue.

[3] S. HERMSMEYER, et al., "Improved Helium Cooled Pebble Bed Blanket," FZK report, FZKA 6399, Karlsruhe, Germany(Dec.1999).

[4] X.R. WANG, S. MALANG, A.R. RAFFRAY and the ARIES Team, "Maintenance Approaches for ARIES-CS Power Core," this issue.

[5] S. J. ZINKLE, N. M. GHONIEM, "Operating Temperature Windows for Fusion Reactors Structural Materials" *Fusion Engineering and Design*, **51-52**, 55 (2000).

[6] R. SCHLEICHER, A. R. RAFFRAY, C. P. WONG, "An Assessment of the Brayton Cycle for High Performance Power Plant," *Fusion Technology*, **39** (2), 823-827 (March 2001).

[7] P.F.PETERSON, "Multiple-Reheat Brayton Cycles for Nuclear Power Conversion With Molten Coolants," *Nuclear Technology* , **144**, 279 (2003).